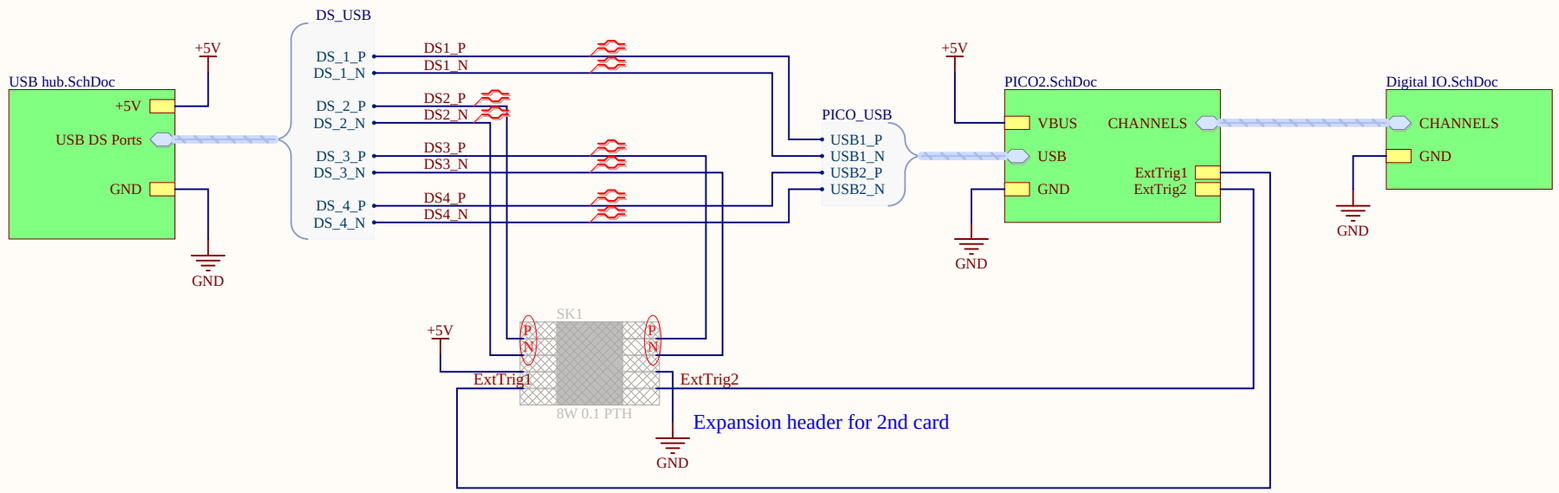

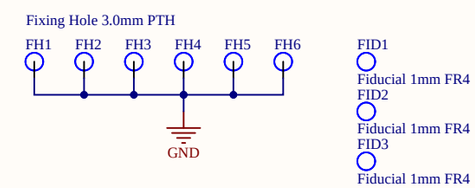

All design files located at https://github.com/bobb-uk/0013-Pico2_LA
Forked from https://github.com/gusmanb/logicanalyzer

ISS	ECO	DATE	AUTH	NOTES
A	IER-000nnn	26/02/2026	RB	Initial release. GPLv3

DRG # 0013 Schematic — 1 of 4

TITLE PICO2 48ch Logic Analyser — A3

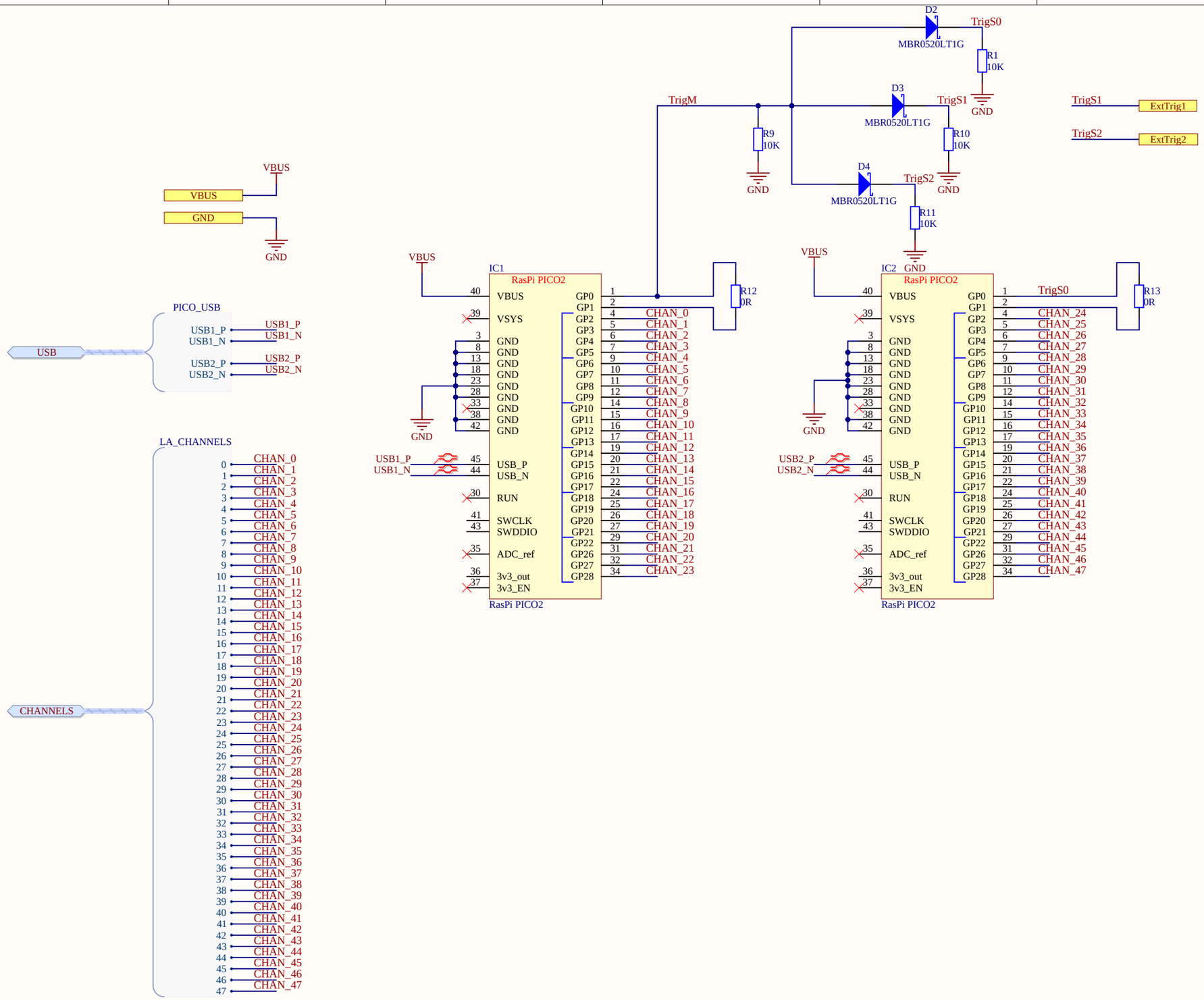

ISS	ECO	DATE	AUTH	NOTES
A	IER-000nnn	26/02/2026	RB	Initial release. GPLv3

DRG # 0013 Schematic — 2 of 4

TITLE PICO2 48ch Logic Analyser — A3

A	IER-000nnn	26/02/2026	RB	Initial release. GPLv3
ISS	ECO	DATE	AUTH	NOTES

DRG # 0013 Schematic — 3 of 4

TITLE PICO2 48ch Logic Analyser — A3

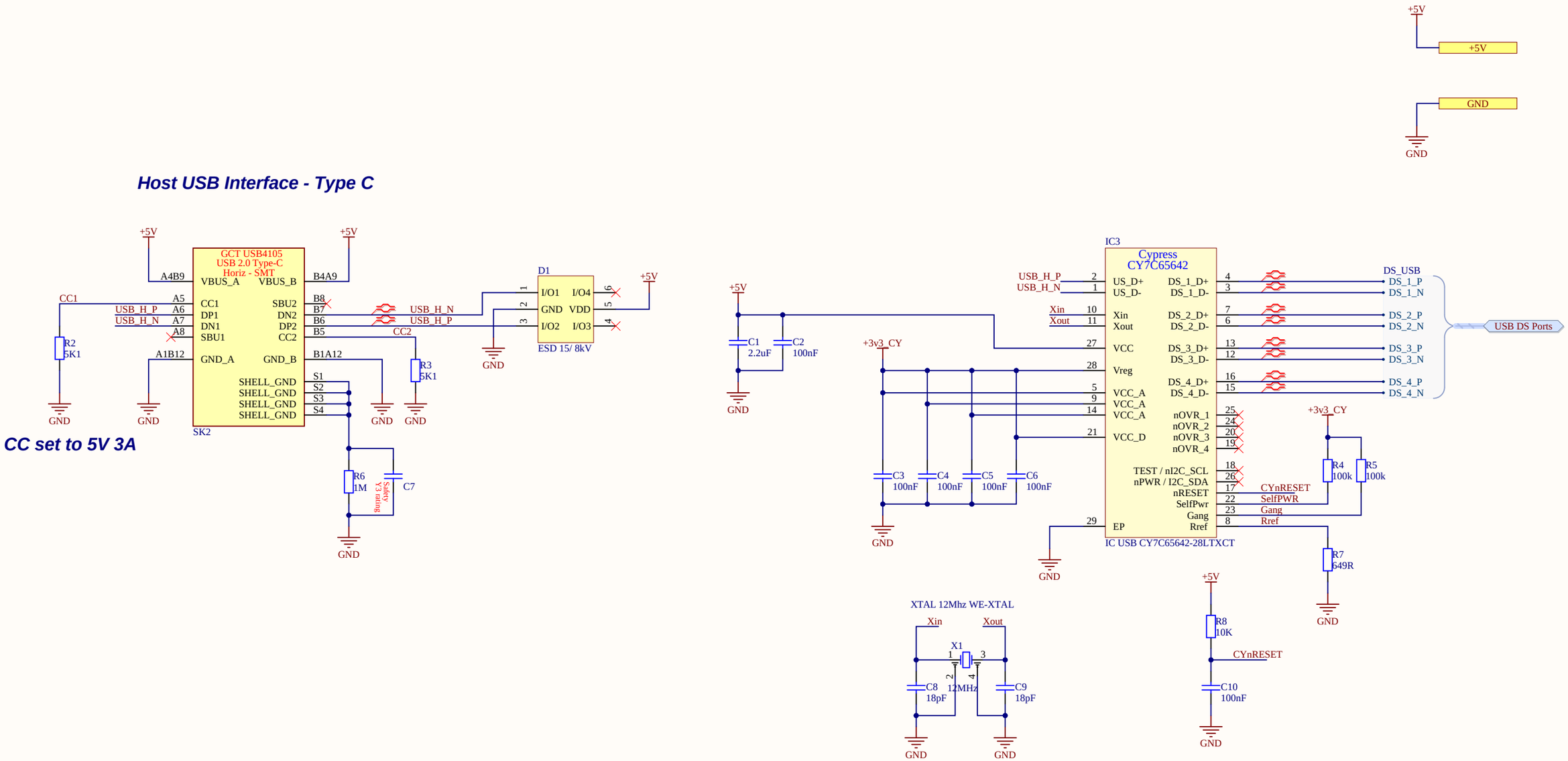

A	IER-000nnn	26/02/2026	RB	Initial release. GPLv3
ISS	ECO	DATE	AUTH	NOTES

DRG # 0013 Schematic — 4 of 4

TITLE PICO2 48ch Logic Analyser — A3